Schematic Diagram

Parts Location Guide

Part No.	Index
Q_{101}	A_2
Q_{102}	B_2
Q_{151}	C_2
Q_{152}	D_2
Q_{201}	B_3
Q_{202}	B_3
Q_{203}	C_4
Q_{301}	E_3
Q_{302}	F_3
Q_{303}	F_3
Q_{304}	H_3
Q_{305}	E_3
Q_{401}	E_1
Q_{402}	E_1
Q_{403}	F_1
Q_{404}	E_2
Q_{501}	J_3
Q_{502}	K_3
Q_{503}	H_4
Q_{551}	J_1
Q_{552}	J_1
Q_{553}	J_2
Q_{601}	E_4
Q_{602}	E_4
Q_{701}	F_4
Q_{702}	G_4
Q_{703}	H_4
Q_{801}	G_5
Q_{802}	G_5
Q_{803}	H_5
D_{101}	B_2
D_{301}	H_3
D_{302}	G_3
D_{402}	G_1
D_{403}	G_2
D_{404}	G_2
D_{501}	H_4
D_{601}	E_5
D_{602}	E_5
D_{701}	F_4
D_{702}	F_4
D_{801}	J_5
D_{802}	J_5
D_{803}	K_5
D_{804}	K_5
D_{805}	G_5
Se_{901}	B_5
Th_{551}	J_1
VR_{301}	E_3
VR_{501}	J_4
VR_{502}	K_4
VR_{551}	H_2
VR_{601}	E_5
VR_{602}	F_5
VR_{603}	F_5
VR_{701}	F_4
VR_{702}	G_4
VR_{703}	G_4
△ R_{307}	E_3
△ R_{310}	F_3
△ R_{316}	G_3
△ R_{326}	H_2
△ R_{406}	F_1
△ R_{407}	F_2
△ R_{413}	G_1
△ R_{423}	G_2
△ R_{506}	H_4
△ R_{515}	J_2
△ R_{710}	G_4
△ R_{806}	G_5
△ C_{409}	G_2
△ C_{427}	E_1
△ C_{806}	G_5
△ C_{807}	G_5
△ C_{812}	H_5
△ C_{813}	J_5

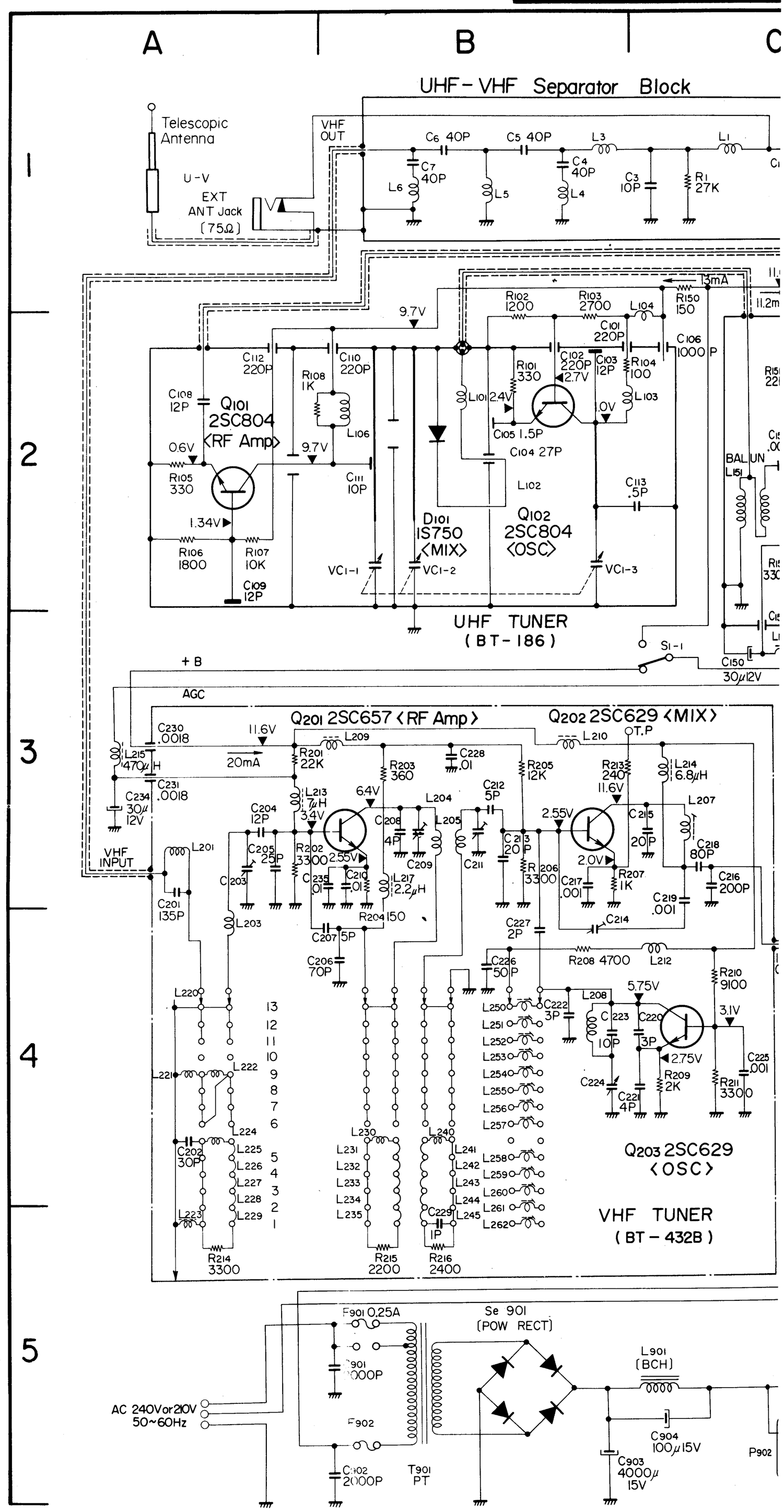

Note:

- Voltage values are measured from ground to the point indicated with a VOM. (Internal resistance: 20 K ohms/volt)
- UHF-VHF channel Selector Switch shown in "VHF (405 Lines)" position.
- Resistor and capacitor marked with △ are to be selected.

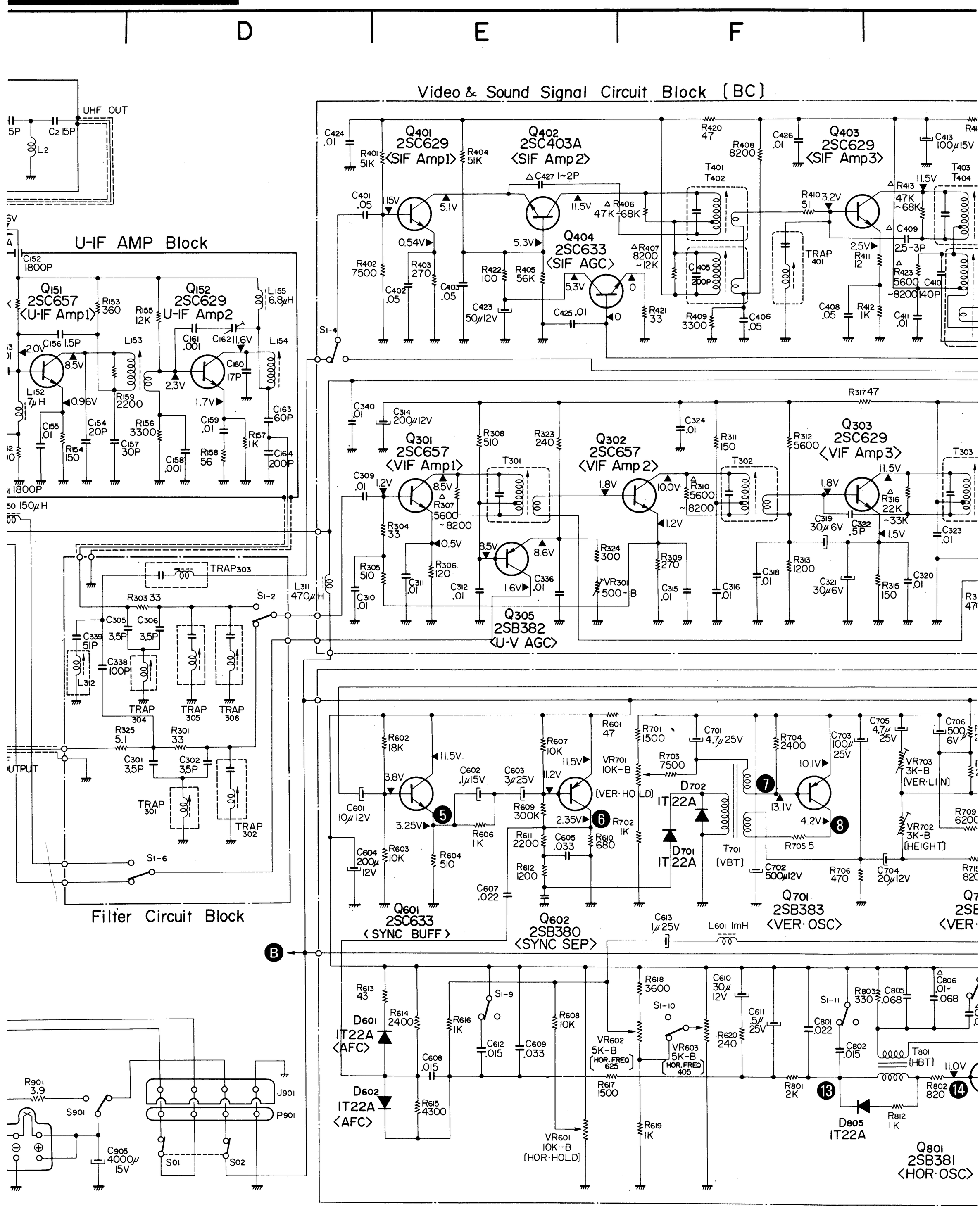

■ Balloons ①, ② etc, shown on circuit schematic indicate points of observation of the waveform. (See on pages 29 and 30)

■ Supply voltage 240 V or 210 V, 50 cycle AC.

■ All capacitance values in μF & all resistance in ohms unless otherwise noted.

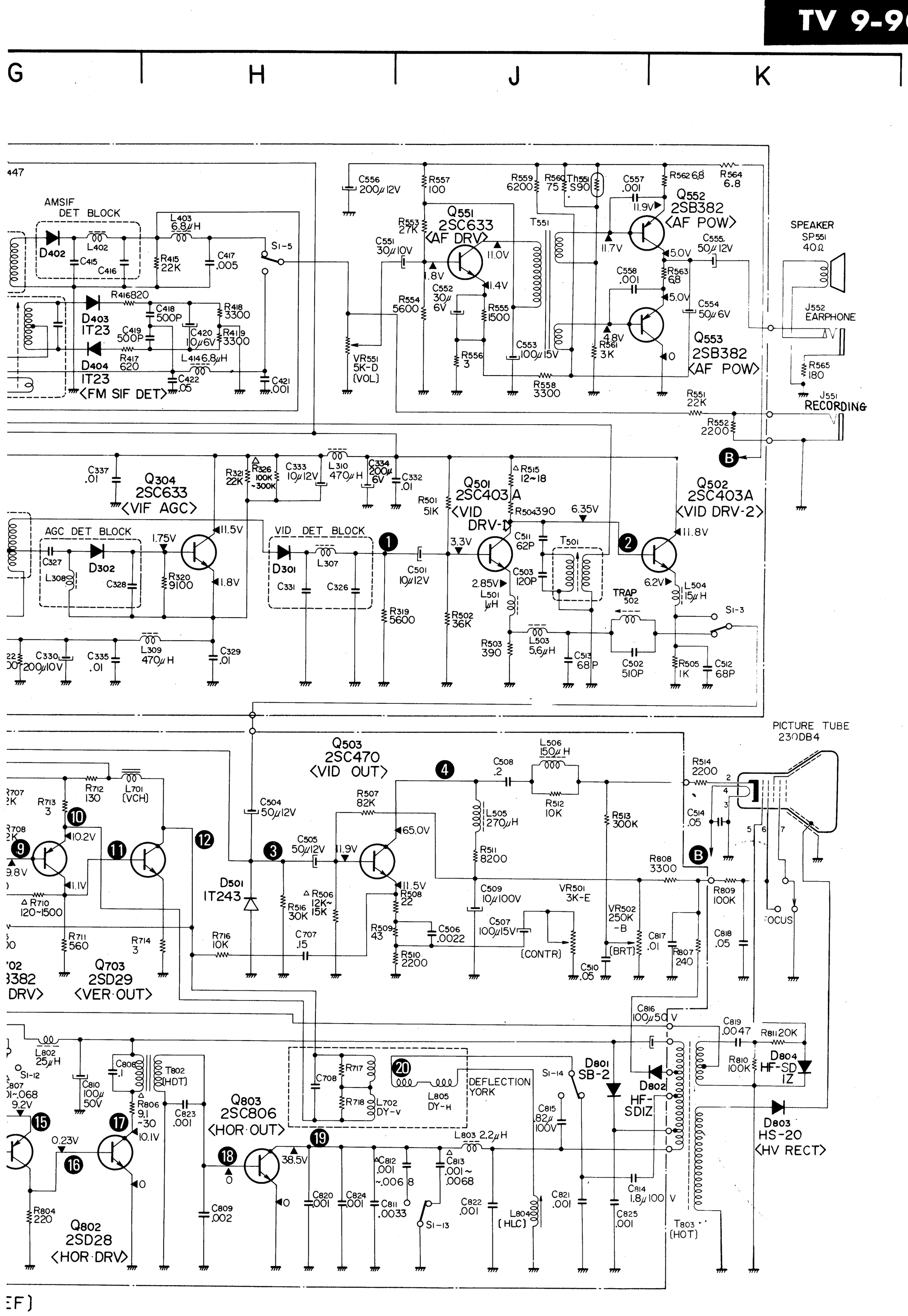
G
H
J
K
AMSIF DET BLOCK
D402
L402
C415
C416
L403 6.8μH
R415 22K
C417 .005
S1-5
R416 820
D403 IT23
C418 500P
R418 3300
C419 500P
C420 10μ6V
R419 3300
D404 IT23
R417 620
L414 6.8μH
C422 .05
C421 .001
(FM SIF DET)
C556 200μ12V
R557 100
R559 6200
R560 75
Th551 S90
C557 .001
R562 6.8
R564 6.8
Q552 2SB382 (AF POW)
Q551 2SC633 (AF DRV)
R553 27K
C551 30μ10V
T551
C555 50μ12V
SPEAKER SP551 40Ω
C558 .001
R563 6.8
C552 30μ 6V
R554 5600
R555 1500
C554 50μ6V
J552 EARPHONE
Q553 2SB382 (AF POW)
VR551 5K-D (VOL)
R556 3
C553 100μ15V
R561 3K
R565 180
R558 3300
R551 22K
J551 RECORDING
R552 2200
B
C337 .01
Q304 2SC633 (VIF AGC)
R321 22K
R326 100K ~300K
C333 10μ12V
L310 470μH
C334 200μ 6V
C332 .01
R515 12~18
Q501 2SC403A (VID DRV-1)
R501 51K
R504 390
6.35V
Q502 2SC403A (VID DRV-2)
AGC DET BLOCK
C327
L308
D302
C328
R320 9100
VID DET BLOCK
D301
L307
C331
C326
C501 10μ12V
R319 5600
R502 36K
C511 62P
T501
C503 120P
L501 μH
R503 390
L503 5.6μH
C513 68P
TRAP 502
C502 510P
L504 15μH
S1-3
R505 1K
C512 68P
L309 470μH
C330 200μ10V
C335 .01
C329 .01
PICTURE TUBE 230DB4
Q503 2SC470 (VID OUT)
L506 150μH
C508 .2
R512 10K
R514 2200
R712 130
L701 (VCH)
R713 3
C504 50μ12V
R507 82K
L505 270μH
R513 300K
C514 .05
C505 50μ12V
R511 8200
R808 3300
R710 120~1500
D501 IT243
R516 30K
R506 12K~15K
R508 22
C509 10μ100V
VR501 3K-E
R809 100K
FOCUS
R711 560
R714 3
R716 10K
C707 .15
R509 43
C506 .0022
C507 100μ15V
VR502 250K -B
C817 .01
C818 .05
R510 2200
(CONTR)
C510 .05
(BRT)
R807 240
Q703 2SD29 (VER·OUT)
C816 100μ50V
C819 .0047
R811 20K
L802 25μH
S1-12
C810 100μ 50V
C808 .1
T802 (HDT)
R806 9.1 ~30
C823 .001
C708
R717
R718
L702 DY-V
L805 DY-H
DEFLECTION YORK
S1-14
D801 SB-2
D802 HF-SD1Z
R810 100K
D804 HF-SD1Z
D803 HS-20 (HV RECT)
C815 .82μ 100V
Q803 2SC806 (HOR·OUT)
L803 2.2μH
C812 .001 ~.0068
C813 .001~ .0068
C814 1.8μ100V
R804 220
Q802 2SD28 (HOR·DRV)
C809 .002
C820 .001
C824 .001
C811 .0033
S1-13
C822 .001
L804 (HLC)
C821 .001
C825 .001
T803 (HOT)